DRIVE TRAIN, FRONT GEARCASE MOUNTING - Z26SPD92AN/AH/BN/BH (C750066)

2026 RZR - RZR PRO S ULTIMATE (R01) - Z26SPD92AN/AH/BN/BH

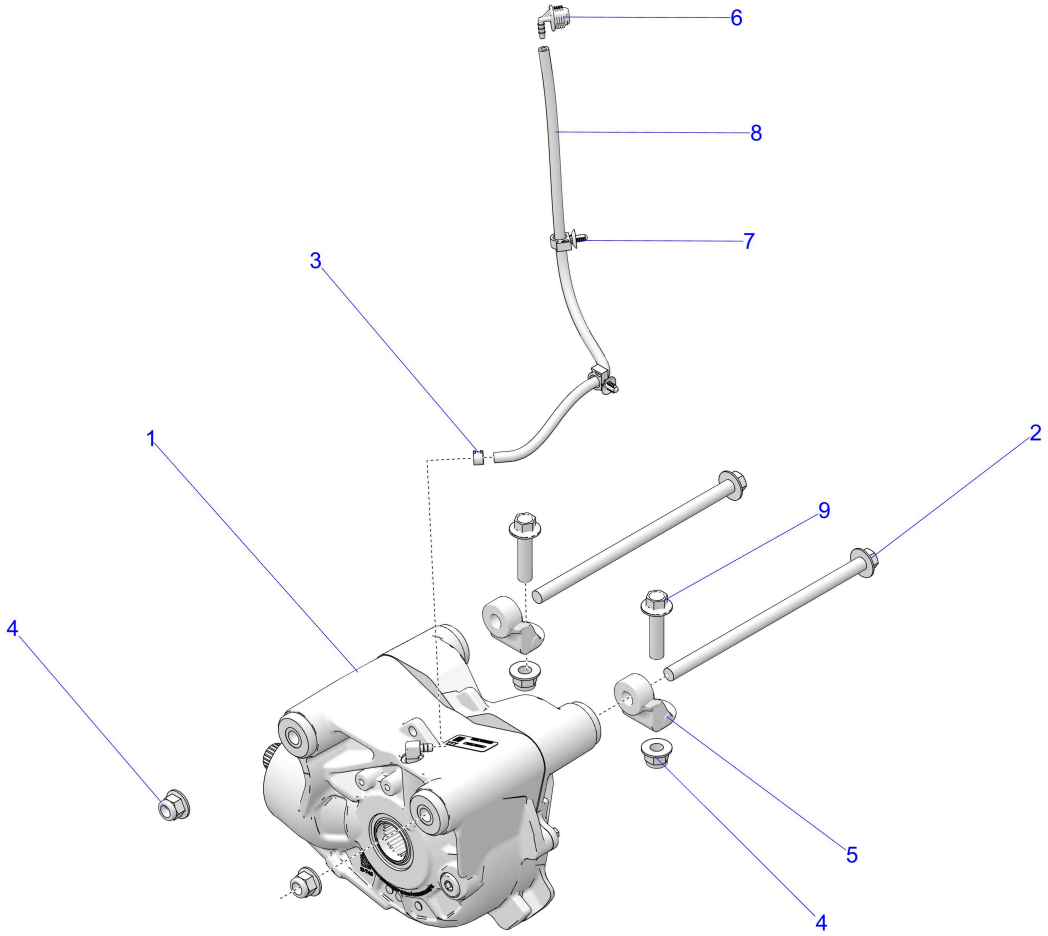

© 2023 Polaris Industries Inc. C750066

Reference #	*Part#*	*Description*	*Quantity*
1	-------	ASM., GEARCASE, FRONT [SEE DRIVE TRAIN, FRONT GEARCASE]	1
2	7520771	SCR-HXFL,M12X1.25X230 10.9 SPC	2
3	7080307	CLAMP-HOSE, (LARGE GREEN)	1
4	7547860	NUT-HXFL-M12X1.25 10 SPC NYL	2
5	5634705	CASTING-FRONT DRIVE MNT	2
6	5454069	FITTING-VENT LINE,90	1
7	7670116	CLIP, ROUTING, .472 B.D., HINGED	2
8	8450153-43	LINE-BOOST,3/16 ID,43CM	1
9	7520003	SCR-HXFL-M12X1.25X50 10.9 ZB3	2

Copyright 1996-2026 Polaris Industries U.S.A All rights reserved.